轴承结构：滚珠轴承 Bearing System:Ball
外框材质：铝合金 Frame:Aluminum Alloy
扇叶材质：金属叶轮 Impeller: Metal Impellers

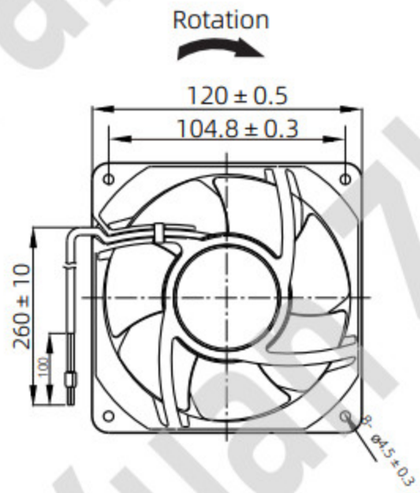

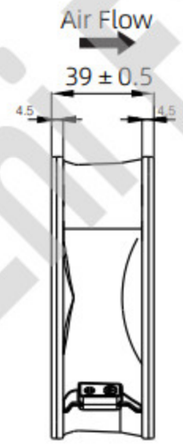

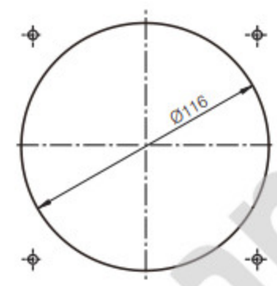

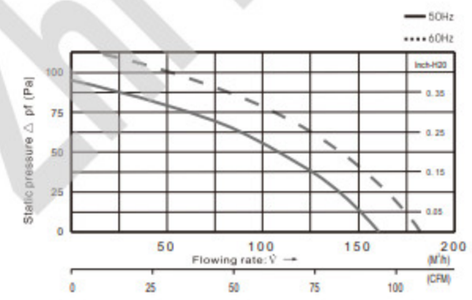

配套产品选项
Attachment Option

控制技术
Control Technology

配套产品选项
Attachment Option

控制技术
Control Technology

型号 Model	轴承 Bearing System	额定电压 Rated Voltage	额定频率 Rated Frequency	额定电流 Rated Current	额定功率 Rated Power	额定转速 Rated Speed	最大风量 Max. Air Flow		最大风压 Max. Air Pressure		噪音 Noise	重量 Weight
Part no.	Ball	VAC	Hz	A	W	RPM	CFM	m^3/h	mmH_2O	Pa	dB(A)	g
XZ12038HBL1M	B	115	50/60	0.26/0.22	21/17	2650/3050	106	180.09	13.27	130	36/38	530
XZ12038HBL2M	B	230	50/60	0.13/0.11	21/17	2600/3000	106	180.09	13.27	130	36/38	
XZ12038HBL3M	B	380	50/60	0.10/0.08	21/17	2600/3000	106	180.09	13.27	130	36/38	

轴承结构：滚珠轴承 Bearing System:Ball
外框材质：铝合金 Frame:Aluminum Alloy
扇叶材质：金属叶轮 Impeller: Metal Impellers

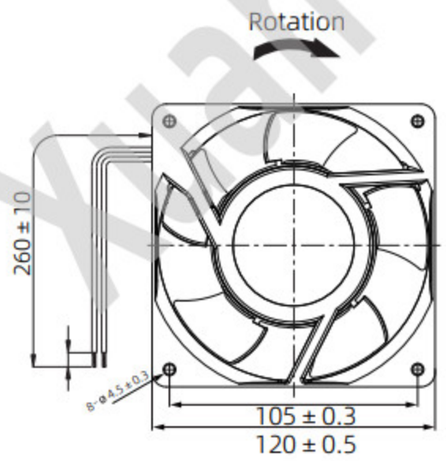

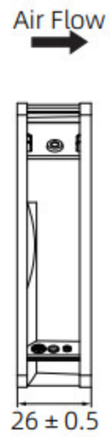

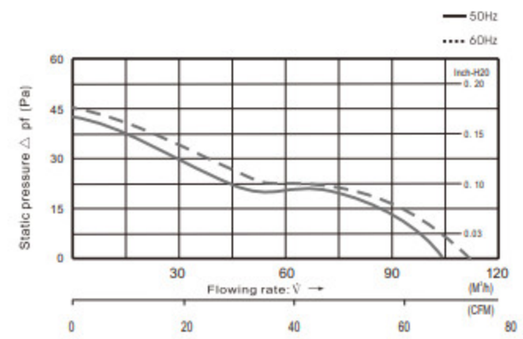

配套产品选项
Attachment Option

控制技术
Control Technology

配套产品选项
Attachment Option

控制技术
Control Technology

型号 Model	轴承 Bearing System	额定电压 Rated Voltage	额定频率 Rated Frequency	额定电流 Rated Current	额定功率 Rated Power	额定转速 Rated Speed	最大风量 Max. Air Flow		最大风压 Max. Air Pressure		噪音 Noise	重量 Weight
Part no.	Ball	VAC	Hz	A	W	RPM	CFM	m^3/h	mmH_2O	Pa	dB(A)	g
XZ12025HBL1A	B	115	50/60	0.16/0.14	17/13	2300/2600	59/67	113.83	4.60	45.08	39/41	350
XZ12025HBL2A	B	230	50/60	0.10/0.08	17/12	2300/2600	59/67	113.83	4.60	45.08	39/41	
XZ12025HBL3A	B	380	50/60	0.07/0.06	17/13	2300/2600	59/67	113.83	4.60	45.08	39/41	

注：以上数据仅供参考，如有变更恕不另行通知。
Notes: Above specification is only for reference and subject to change without notice.

Xuan Zhi Fans